Data over the power cable that is already there.

Presentation for industrial partners,
integrators and buyers of the technology

In brief

- WattBus transmits RS485 data over existing power cables, so no new data line is needed.
- In a test on a CNC machine, the link was stable at 9600 bit/s over 200 m of power cable at 230 V / 50 Hz.
- The device is built and tested with RS485, but on customer request it can support other protocols. We adapt it to your line.
- We offer a pilot project, OEM supply, a licence or sale of the complete technology.

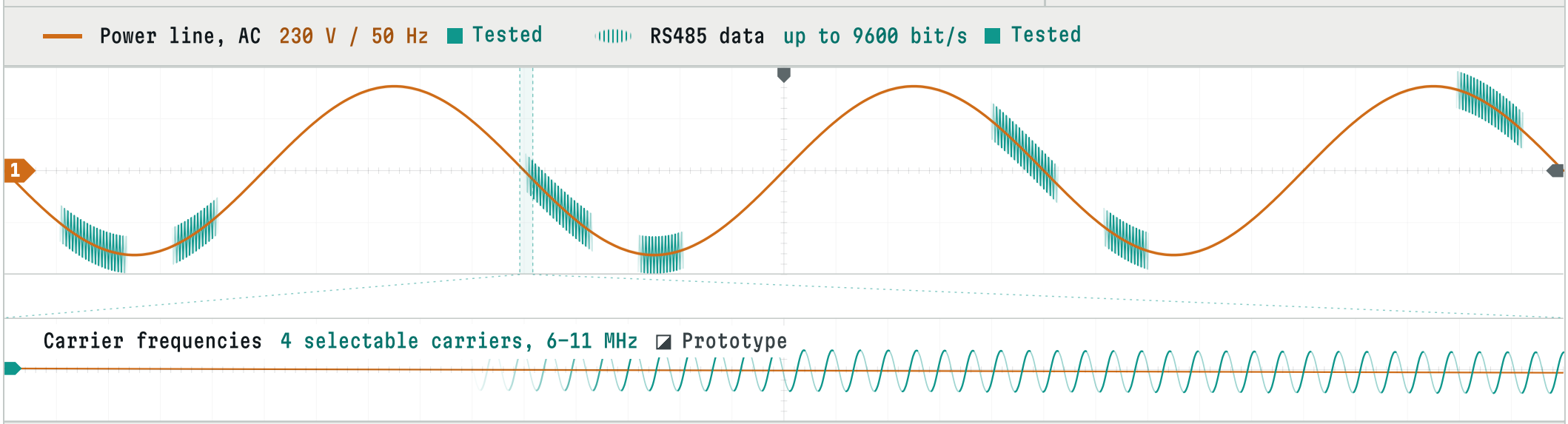

Running a data cable to a machine is expensive.

Older machines, pumps and drives often have no data line. Laying one in a running facility means work at ceiling height, core drilling through concrete and sometimes stopping production. The power cable, however, already reaches every machine.

Usually

- A new data cable to every machine
- Cable trays, core drilling, lifting platforms
- Downtime while the work is done

With WattBus

- One module at each end of the existing power cable
- DIN-rail mounting in the existing cabinet
- No cable work in the production area

All prices incl. 19% VAT. Sources, checked in November 2026: meister-job.de (concealed cabling incl. chasing and plastering), angebots-meister.de (core drilling, net price plus 19% VAT), dein-elektriker-info.de (electrician in medium-sized and large cities). Per machine: 100 m of concealed cabling, cable work only.

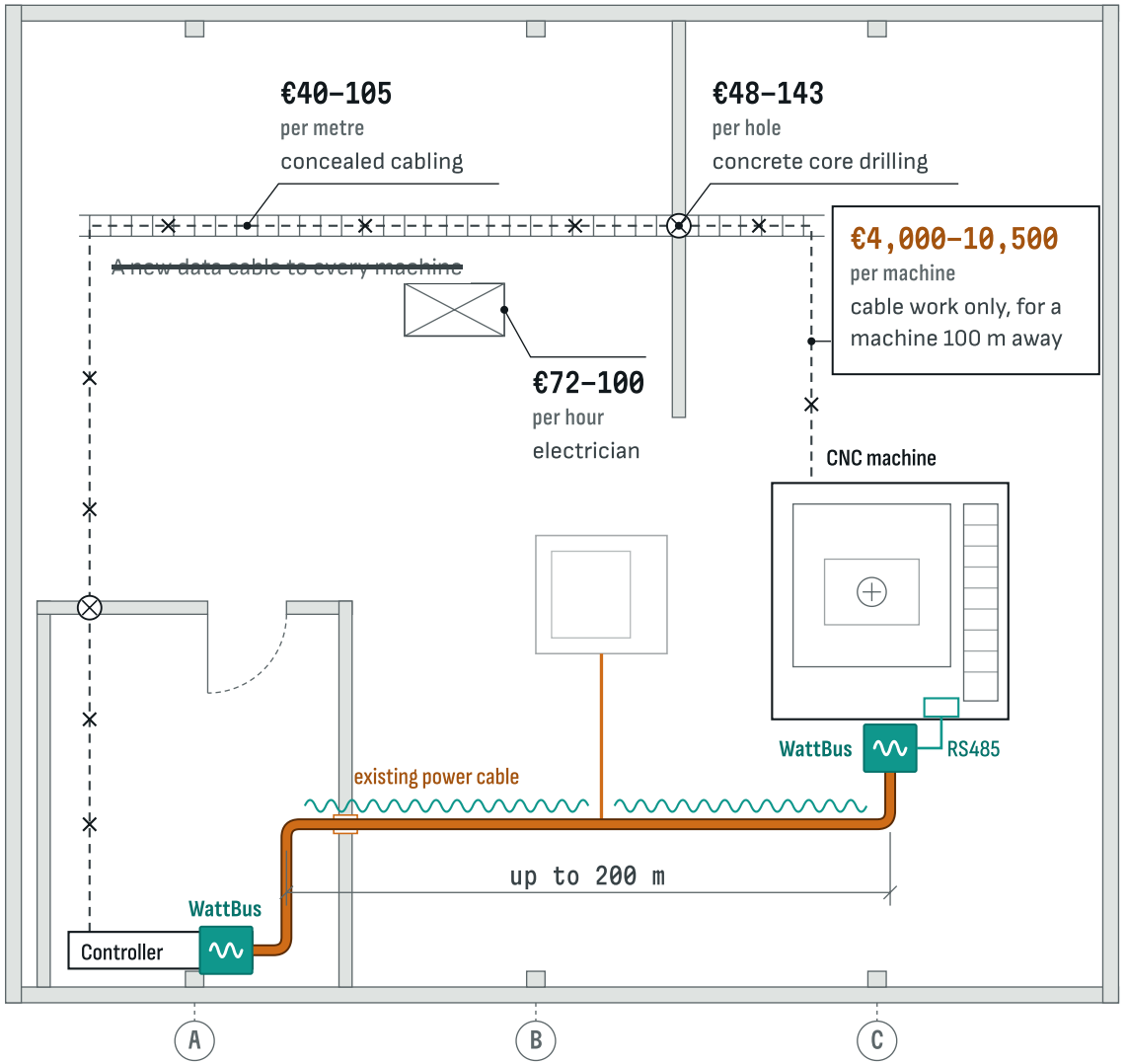

Fig. 1 Illustration

The power cable becomes the data line

WattBus is a pair of DIN-rail modules, one at each end of the power cable. Your devices connect to them through their usual RS485 interface.

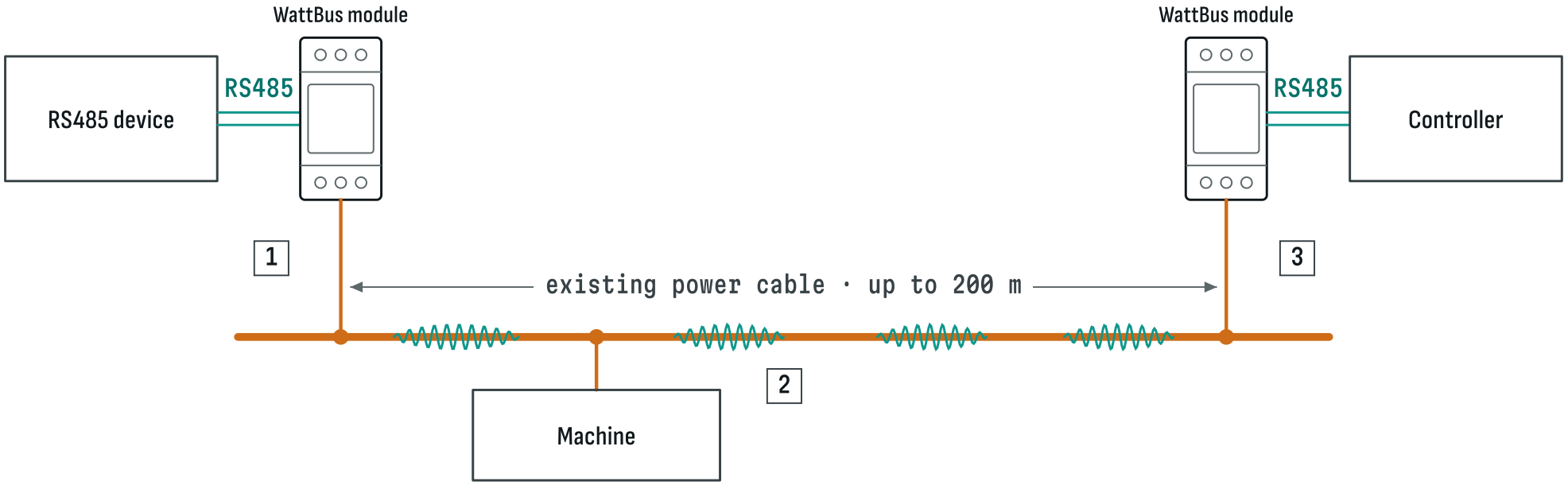

Fig. 2 Illustration

1 Connect

The module connects to your device's RS485 port and to the power cable that feeds the device.

2 Transmit

The module turns the data into a carrier signal and sends it over the live power cable.

3 Receive

A second module at the other end recovers the data and outputs standard RS485 again.

Tested on a running CNC machine

The prototypes were tested on an ordinary unshielded power cable carrying mains voltage. The control panel of a running CNC machine exchanged data with its control boards through the modules and this cable.

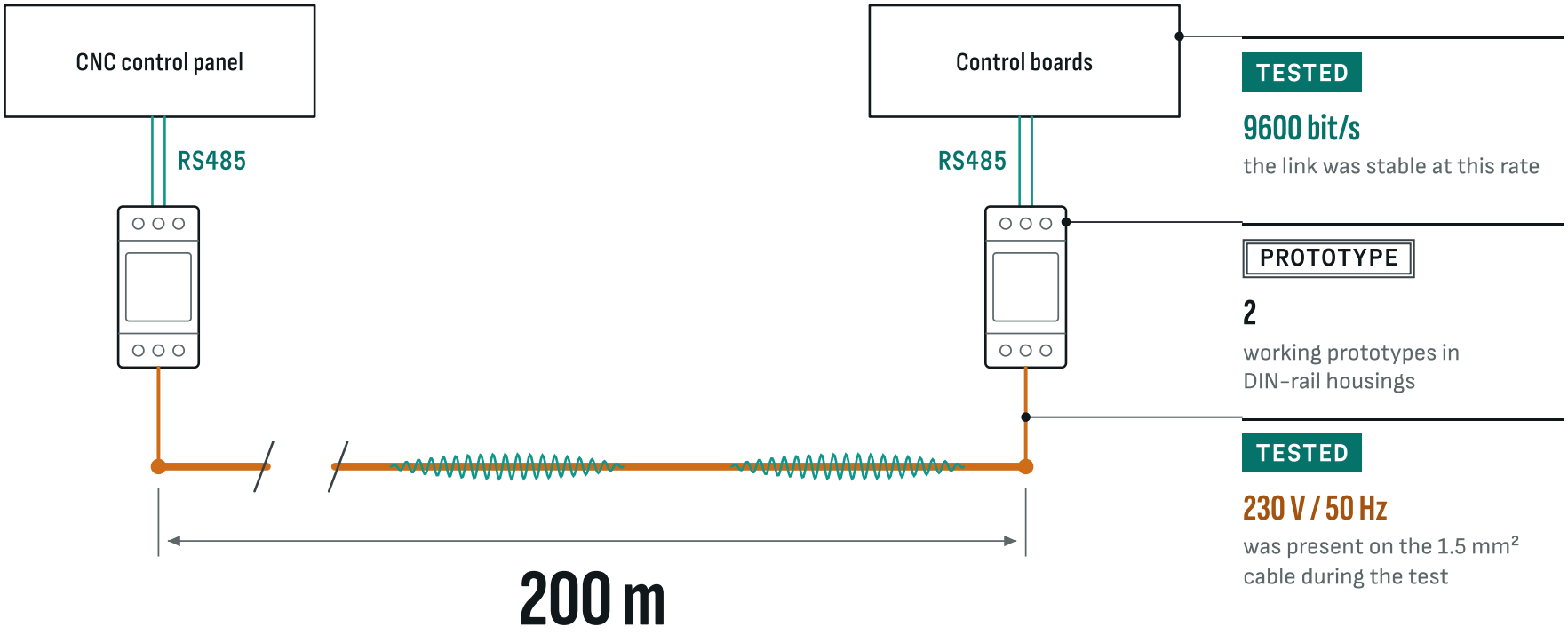

Fig. 3 Illustration

A device, not a chip

Chips and evaluation boards for data transmission over power lines are available on the market. They are building blocks for electronics engineers: a device based on them still has to be designed, built and tested. In WattBus this work has already been done.

DIN-rail mounting

The module fits a standard electrical cabinet, and your devices connect to it via RS485. It was tested on a cable carrying 230 V.

Standard components

The current samples use our own circuit with no dedicated power-line chip, only common standard components. This reduces dependence on one supplier.

Parameters in our hands

The carrier frequency and transmission settings are defined in our own circuit. We select and adjust them ourselves for your line and site conditions.

PROTOTYPE

The existing devices are test samples that were used for development and testing. We build the finished product to your requirements and agree its technical design openly with you.

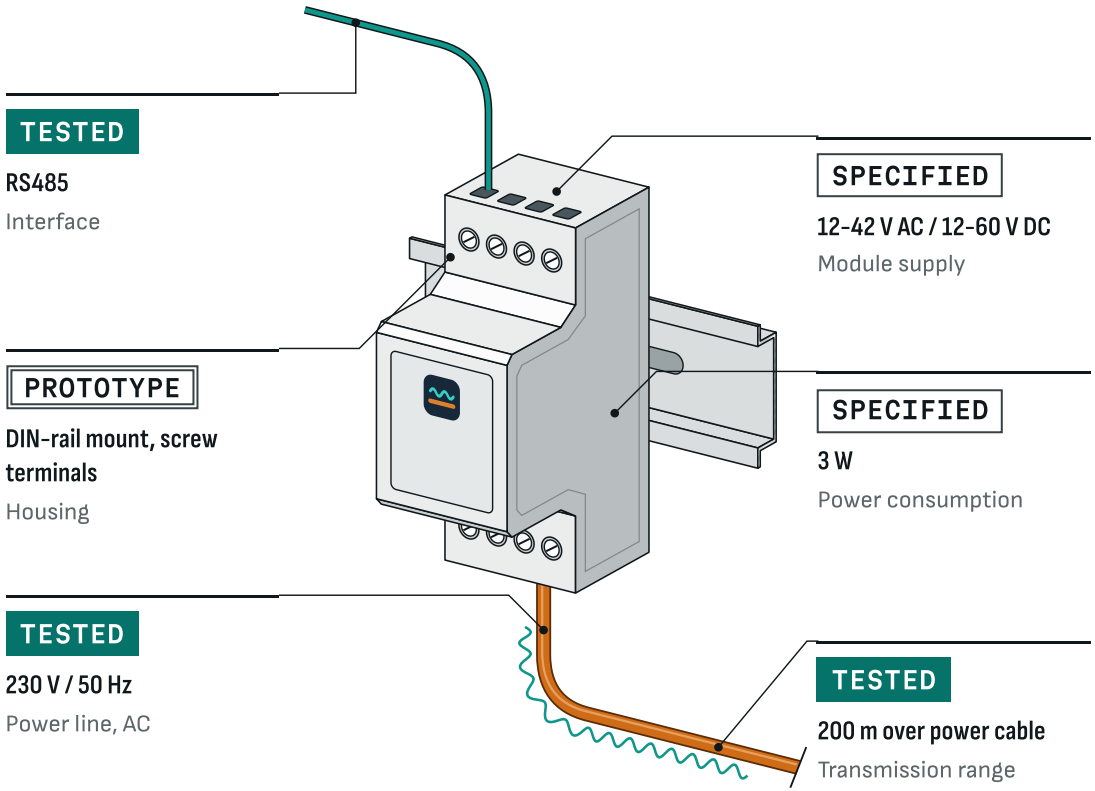

Fig. 4 Illustration of the housing

Adapted to your requirements

ON REQUEST | customer-specific adaptation.

We reconfigure and recalibrate the device for your protocol, cable and operating conditions, both for a single line in a pilot project and for a series version of your product. We also work as an engineering team, designing and building devices to meet specific customer requirements.

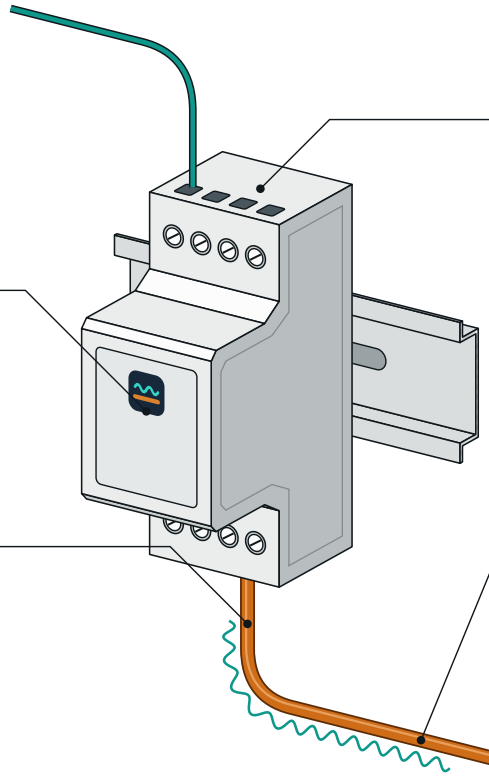

Protocol

Besides RS485, other protocols such as CAN bus are possible on request.

Frequency and signal level

Carrier frequency and signal level are set to suit your market's regulations and the interference on site.

Calibration for your line

In a pilot project the modules can be recalibrated on your line – with your machines running.

Cable and voltage

We adapt the module to your cable type, length and line voltage. DC operation is not yet tested.

Tell us your protocol, cable and conditions – we will tell you what we adapt and how.

Where it is useful

For devices that already have a power cable but also need a data link.

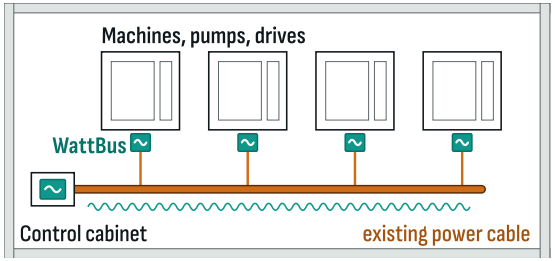

Industrial retrofit

Main focus

Connect existing machines, pumps and drives to machine monitoring, MES or SCADA without new cabling in a running plant.

For: MES and machine-connectivity providers, system integrators, plant operators

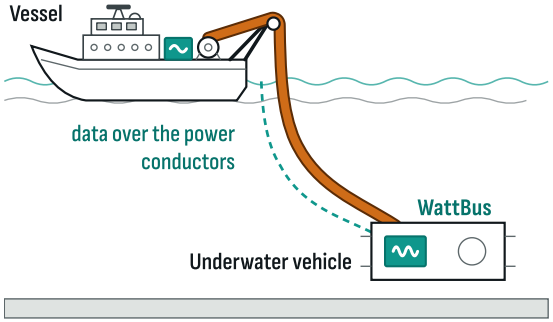

Underwater and offshore equipment

Original purpose

Every extra conductor makes an umbilical cable thicker, heavier and more expensive. With WattBus, commands, sensor data and telemetry travel over the power conductors instead.

For: control and backup channels of ROVs, aquaculture and harbour sensors, subsea instruments. Suitable for telemetry and control, not video.

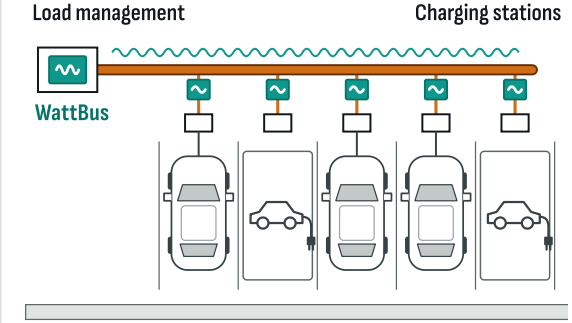

EV charging in car parks

Via licensing

Connect RS485 charging stations to the load-management system and meters without running data cables through concrete.

For: manufacturers of charging stations and load-management systems

What has been tested – and what is still a design value

Only values stamped "Tested" were confirmed in tests. Figures for the series version may differ.

Parameter	Value	Status
Interface	RS485	TESTED
Data rate	up to 9600 bit/s	TESTED
Transmission range	200 m over power cable	TESTED
Power line, AC	230 V / 50 Hz	TESTED
Power line, DC	provided for in the design	DESIGN VALUE
Max. line voltage	600 V AC (calculated, not yet tested)	DESIGN VALUE
Module supply	12–42 V AC / 12–60 V DC	SPECIFIED
Power consumption	3 W	SPECIFIED
Housing	DIN-rail mount, screw terminals	PROTOTYPE
Carrier frequencies	4 selectable carriers, 6–11 MHz	PROTOTYPE
EU series version	CENELEC band 95–148.5 kHz (EN 50065)	PLANNED
Several networks on one cable	independent RS485 networks on different carriers	DESIGN VALUE
Other protocols	on customer request, e.g. CAN bus	ON REQUEST
Customer-specific setup	reconfiguration and recalibration for the customer's line and conditions	ON REQUEST
EMC / CE	testing and CE marking planned for the series version	PLANNED

TESTED
confirmed in tests by the developer.

SPECIFIED
from the design documentation.

DESIGN VALUE
calculated or intended, not yet tested.

PROTOTYPE
how the current samples are built.

PLANNED
on the development roadmap.

ON REQUEST
customer-specific adaptation.

From working prototype to series product

Please note: the existing devices are test samples that were used for development and testing. They are intended for evaluation and demonstration, are not CE-marked and are not offered for sale in the EU. The finished product is built to the customer's requirements.

DONE

- In-house circuit design and complete manufacturing documentation (PCB layout, Gerber files)
- Two working prototypes in DIN-rail housings
- Test on a CNC machine over 200 m of power cable carrying 230 V

NEXT

- EU series version in the CENELEC band 95–148.5 kHz (EN 50065)
- EMC pre-compliance measurements, then testing and CE marking
- Pilot projects with industrial partners

Four ways to work together

We are looking for partners to bring the technology to market with us or to buy it outright. We also design and build devices for your specific application.

Let's talk about your project

Send us your protocol, cable length, voltage and number of devices. We will tell you whether the technology fits and what we would need to adapt.

E-mail

unterwasserbau@gmx.de

Germany

Technical documentation and a live demonstration are available under a non-disclosure agreement (NDA).

Pilot project

Test the technology together with us on one of your lines – we adapt the device to it. For plant operators, integrators and MES providers.

OEM / private label

Add the module to your product range under your own brand. We configure it for your devices and protocol.

Licence

License the technology and documentation for your own production or for integration into your devices.

Purchase

Buy the technology outright: circuit design, manufacturing documentation, prototypes and know-how.